Project Sample

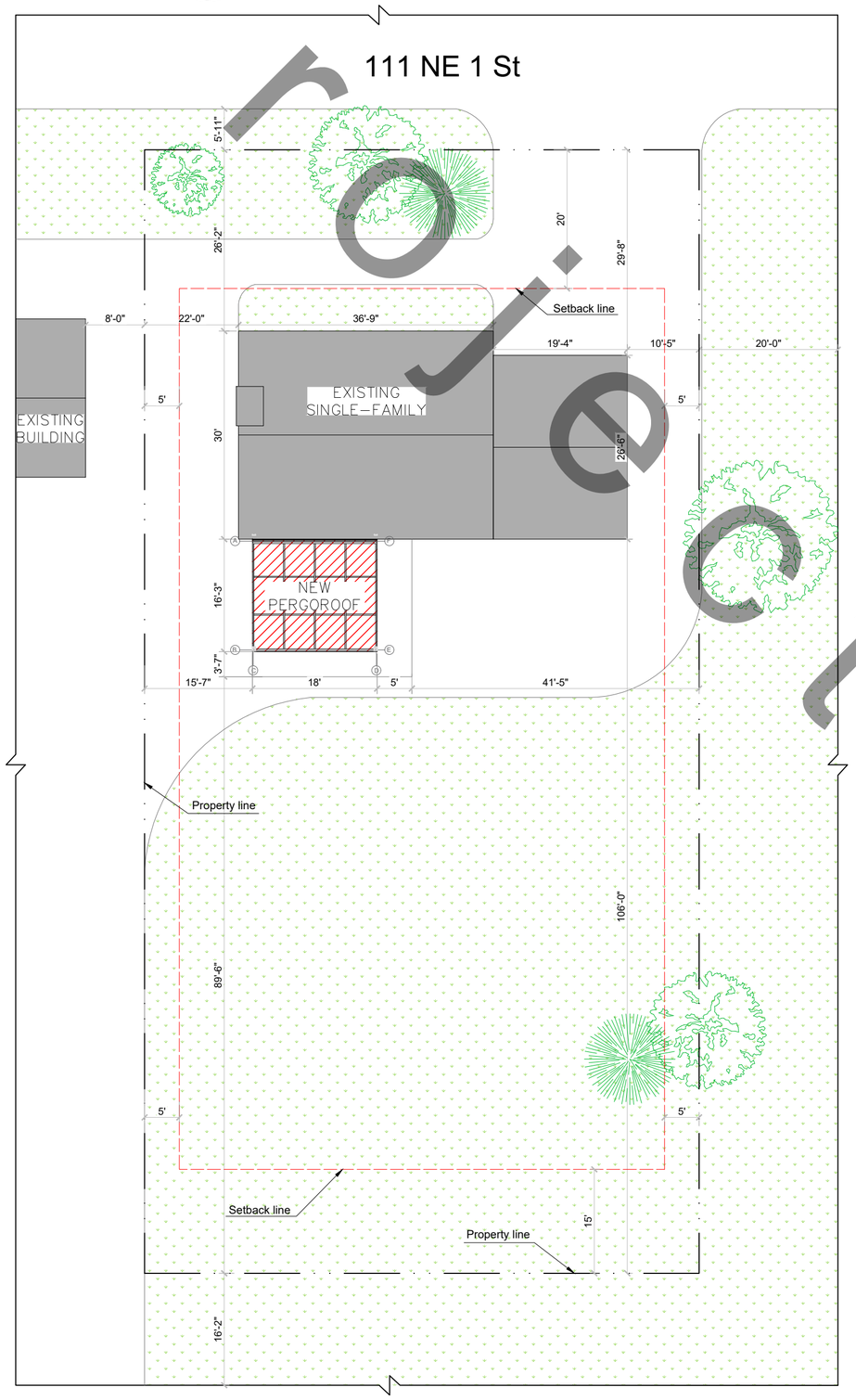

SITE PLAN_1/16" = 1'-0"

DRAWING LEGEND

- DATUM
- REVISION CLOUD & TAG
- ELEVATION REFERENCE
- SECTION HEAD
- DETAIL CALLOUT HEAD
- WINDOW TAG; TEMPERED / SIZE / EGRESS
- TRUE NORTH
- EXHAUST FAN
- PEDESTRIAN ENTRY
- EGRESS LOCATION
- STAIR DIRECTION
- SLOPE DIRECTION

ABBREVIATIONS LIST

&AND	
#NUMBER	
%PERCENT	
AB	ANCHOR BOLT
ARCH	ARCHITECT
BLDG	BUILDING
DIM	DIMENSION
DTL	DETAIL
DR	DOOR
DW	DISHWASHER
DWG	DRAWING
EL	ELEVATION
EXT	EXTERIOR
HGT	HEIGHT
	AIR CONDITIONING
IN.	INCHES
INFO	INFORMATION
INT	INTERIOR
MAX	MAXIMUM
MEMB	MEMBRANE
MIN	MINIMUM
NOM	NOMINAL
REF.	REFRIGERATOR
REV	REVISION
SAF	SELF ADHESIVE FLASHING
TMP.	TEMPERED
TYP	TYPICAL
W	WASHING MACHINE
WD	WOOD
W/D	WASHER DRYER
WH	WATER HEATER
WP	WATERPROOF
WRB	WEATHER RESISTIVE BARRIER

GENERAL NOTES:

1.THIS PROJECT SHALL COMPLY WITH ALL GOVERNING REGULATIONS, ORDINANCES, BUILDING CODES, OR COVENANTS OF THE AREA IN WHICH IT IS BUILT.

2.APPROVAL BY AN INSPECTOR DOES NOT CONSTITUTE AUTHORITY TO DEVIATE FROM THE DRAWINGS OR SPECIFICATIONS.

3.THE CONTRACTOR SHALL SCHEDULE WALK-THROUGHS AT EACH OF BELOW NOTED INTERVALS:
A.PRIOR TO THE COMMENCEMENT OF CONSTRUCTION.
B.PRIOR TO THE COMMENCEMENT OF ALL MECHANICAL + ELECTRICAL WORK.

4.PROVIDE ALL NECESSARY BARRICADES, WARNING SIGNS, + DEVICES TO PROTECT PUBLIC + CONSTRUCTION PERSONNEL DURING CONSTRUCTION.

5. MAINTAIN ALL REQUIRED ACCESS + EGRESS DURING CONSTRUCTION.
6. VERIFY ALL DIMENSIONS ON SITE

REFERENCES:
2018 RESIDENTIAL STAIR GUIDE
R312.1 Guards.

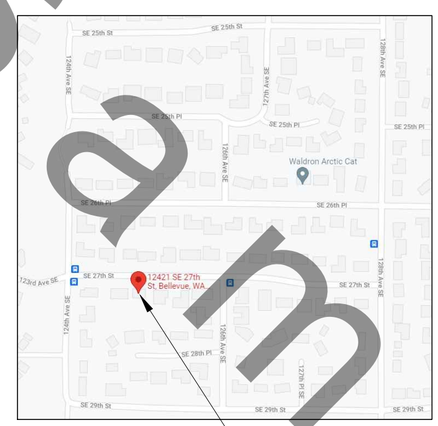

VICINITY MAP
SITE LOCATION

SHEET INDEX

A1	SITE PLAN
A2	EXISTING ELEVATIONS
A3	PROPOSED ELEVATIONS
A4	DETAILS
A5	DETAILS

PROJECT INFO:

PROJECT NUMBER:2110-052
PROJECT ADDRESS:

PARCEL NUMBER: 12 971 SF
LOT AREA:

LEGAL DESCRIPTION:
MANOR CREST # 2
PLat Block:
Plat Lot: 5

PROJECT TEAM:

CLIENT:

CONTACT:

ATVAGA LLC
170 W Dayton St, Ste 204 Edmonds, WA 98020 US
GAYDAR HAMIDOV
ANNA SENCHENKO
CONTACT: anna@atvaga.com

CONTRACTOR:
TBD

ATVAGA LLC
170 W Dayton St, Ste 204 Edmonds, WA 98020
atvaga.com

111 NE 1 St

111 NE 1 St

DISCLAIMER:
Due to limited site and project information, ATVAGA accepts no liability for the content of this feasibility study or for the consequences of any actions taken on the basis of the information provided in this feasibility study.

TEAM	GH
CHECKED	AS

DRAWING REVISION

DESCRIPTION	NO.	DATE
REVIEW SET		2021–12–24

SITE PLAN

A1

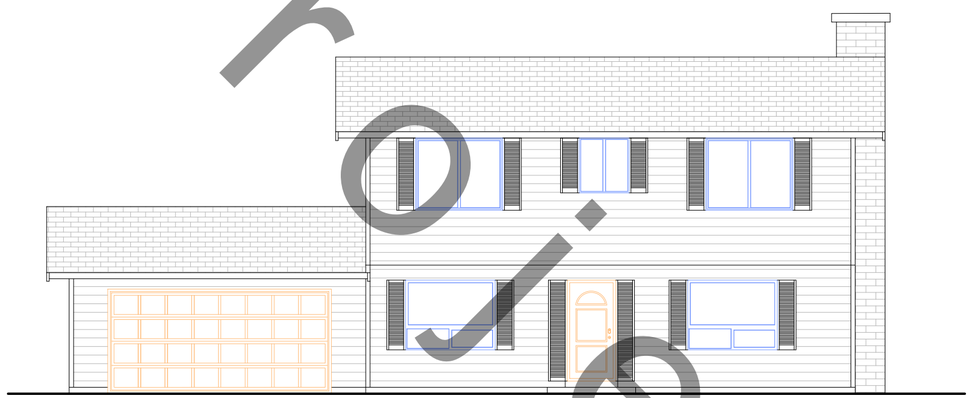

1 EXISTING SOUTH ELEVATION
SCALE: 1/8" = 1'-0"

2 EXISTING WEST ELEVATION
SCALE: 1/8" = 1'-0"

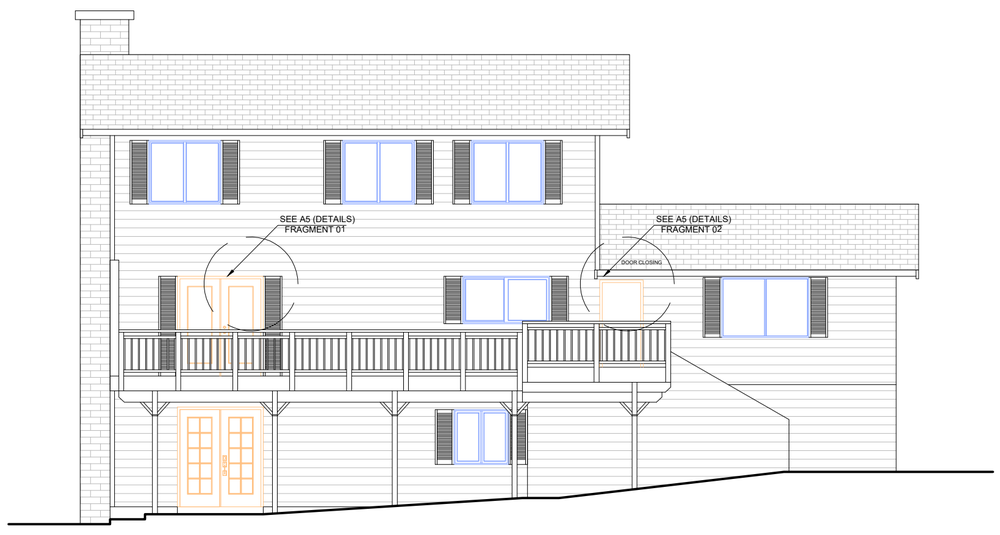

3 EXISTING NORTH ELEVATION
SCALE: 1/8" = 1'-0"

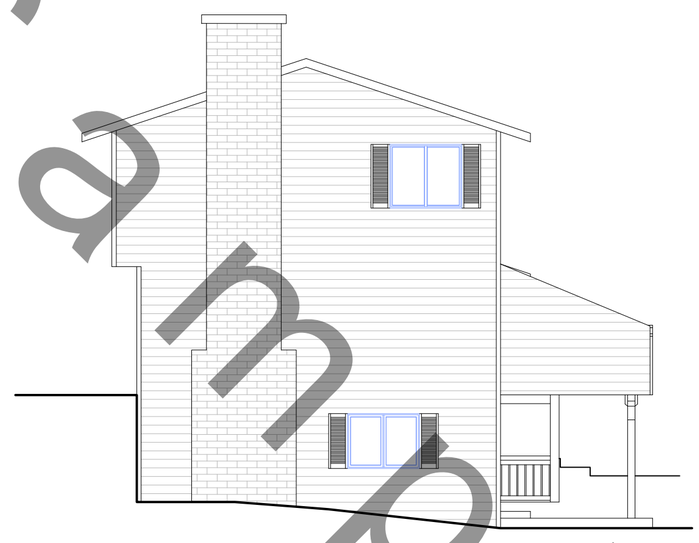

4 EXISTING EAST ELEVATION
SCALE: 1/8" = 1'-0"

Project
Sample

ATVAGA LLC
170 W Dayton St, Ste 204 Edmonds, WA 98020
atvaga.com

111 NE 1 St

111 NE 1 St

DISCLAIMER:
Due to limited site and project information, ATVAGA accepts no liability for the content of this feasibility study or for the consequences of any actions taken on the basis of the information provided in this feasibility study.

TEAM	GH
CHECKED	AS

DRAWING REVISION

DESCRIPTION	NO.	DATE
REVIEW SET		2021-11-03

EXISTING ELEVATION

A2

1 PROPOSED SOUTH ELEVATION
SCALE: 1/8" = 1'-0"

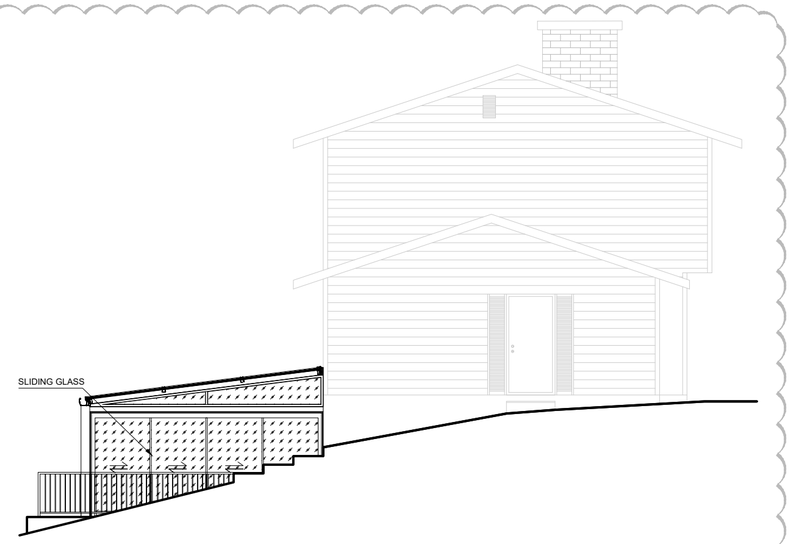

2 PROPOSED WEST ELEVATION
SCALE: 1/8" = 1'-0"

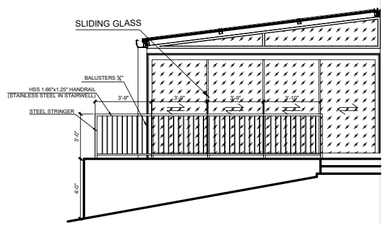

5 ELEVATION A
SCALE: 1/8" = 1'-0"

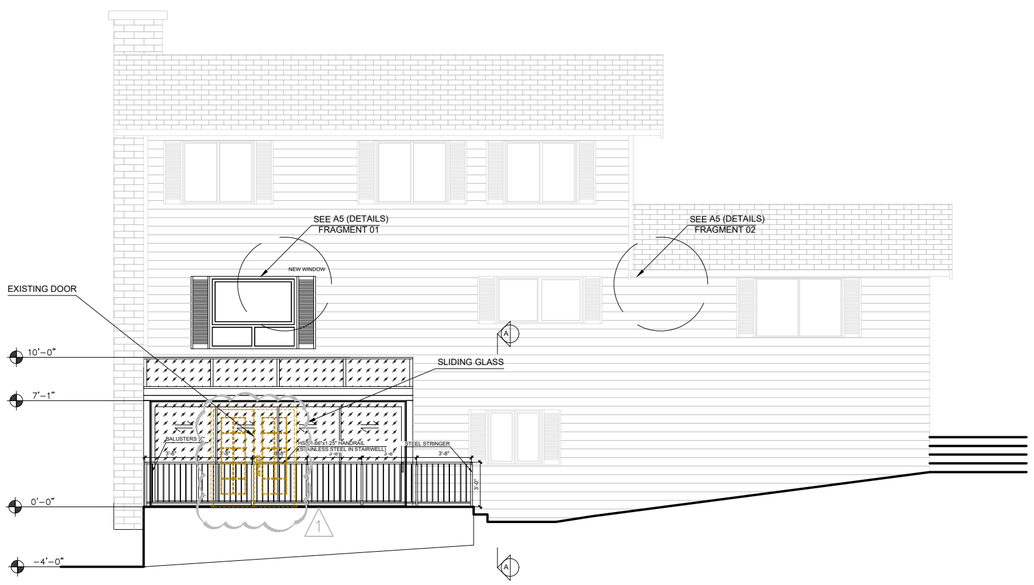

3 PROPOSED NORTH ELEVATION
SCALE: 1/8" = 1'-0"

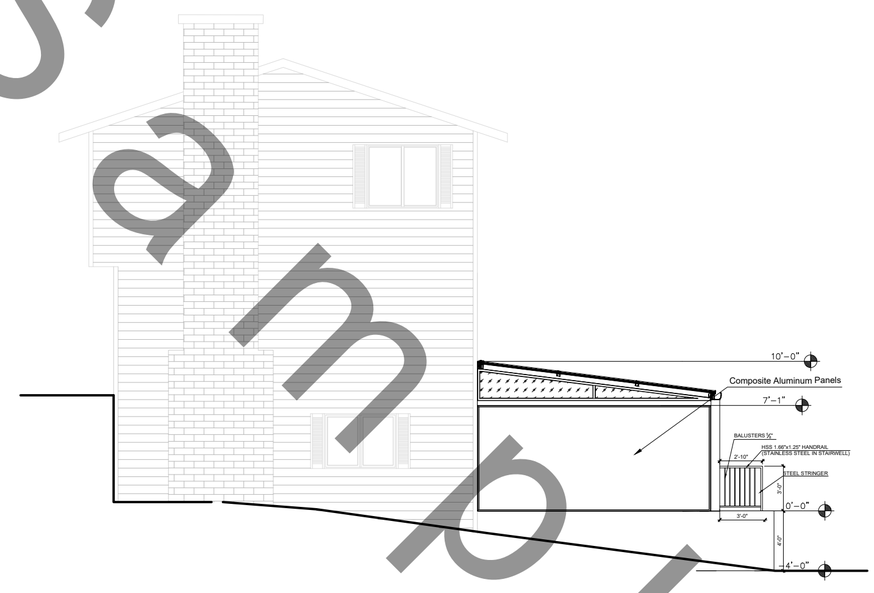

4 PROPOSED EAST ELEVATION
SCALE: 1/8" = 1'-0"

Project Sample

ATVAGA LLC
170 W Dayton St, Ste 204 Edmonds, WA 98020
atvaga.com

111 NE 1 St

111 NE 1 St

DISCLAIMER:
Due to limited site and project information, ATVAGA accepts no liability for the content of this feasibility study or for the consequences of any actions taken on the basis of the information provided in this feasibility study.

TEAM	GH
CHECKED	AS

DRAWING REVISION

DESCRIPTION	NO.	DATE
REVIEW SET		2021–12–24
PERMIT CORRECTION		2022–01–29

PROPOSED ELEVATION

A3

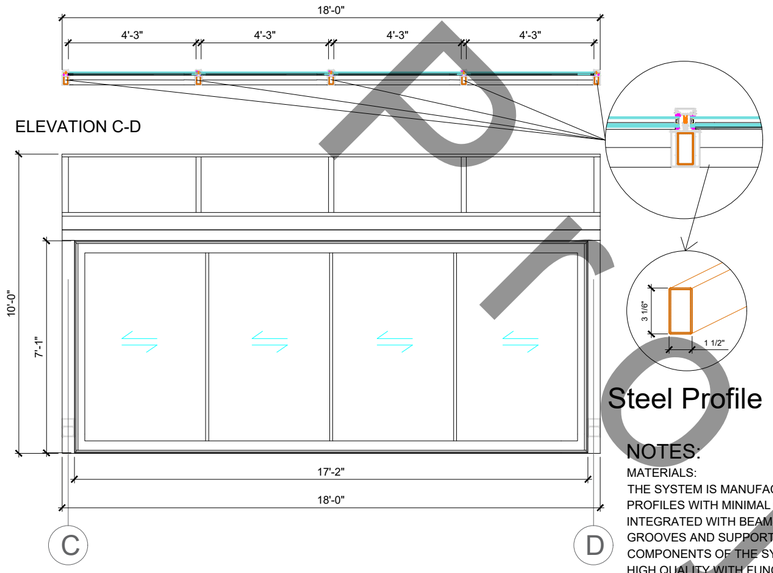

ELEVATION C-D
SCALE: 1/4" = 1'-0"

NOTES:
MATERIALS:
THE SYSTEM IS MANUFACTURED OF MODULAR PROFILES WITH MINIMAL CROSS SECTIONS, INTEGRATED WITH BEAMS, WALL FIXING SECTIONS, GROOVES AND SUPPORT COLUMN PROFILES. THE COMPONENTS OF THE SYSTEM ARE DESIGNED IN HIGH QUALITY WITH FUNCTIONAL MATERIALS.

IT'S SUITABLE FOR LED LIGHTING WITH ITS SPECIAL PROFILE STRUCTURE. THE SYSTEM IS DESIGNED TO PRODUCE SUITABLE ARCHITECTURAL SOLUTIONS AND TRANSPARENT TRANSITION AREAS FOR HOTELS, RESTAURANTS, CAFES AND BAKERIES

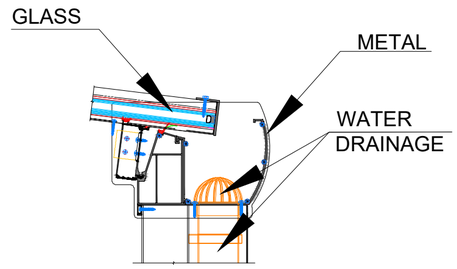

03 GUTTER
SCALE: 1-1/2" = 1'-0"

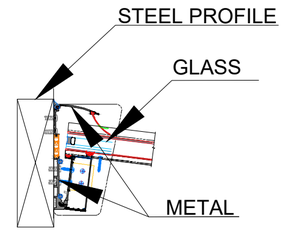

04 ROOF MEMBERS TO THE BEAM
SCALE: 1-1/2" = 1'-0"

PLAN VIEW

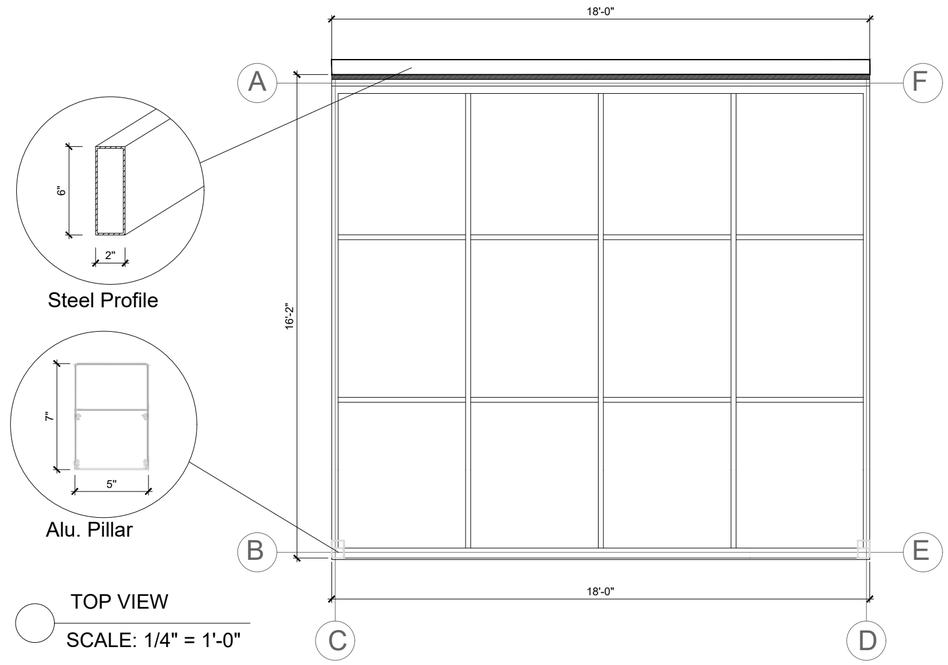

TOP VIEW
SCALE: 1/4" = 1'-0"

ATVAGA LLC
170 W Dayton St, Ste 204 Edmonds, WA 98020
atvaga.com

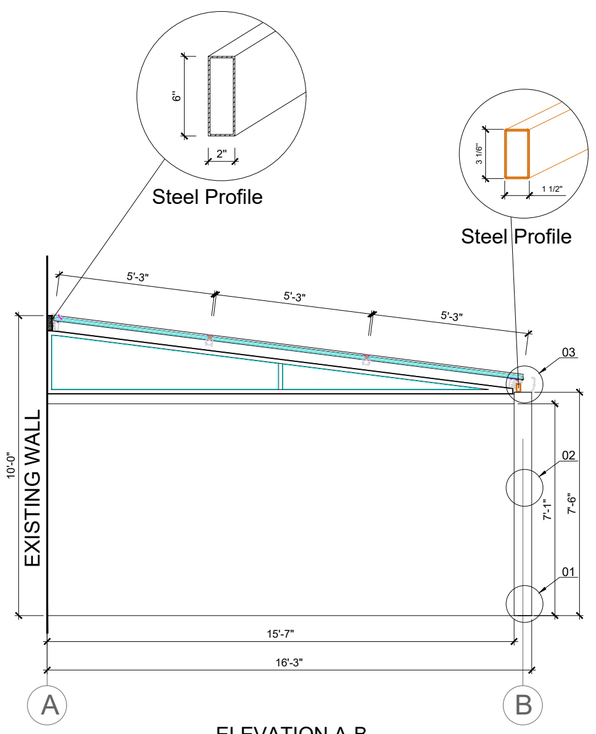

ELEVATION A-B
SCALE: 1/4" = 1'-0"

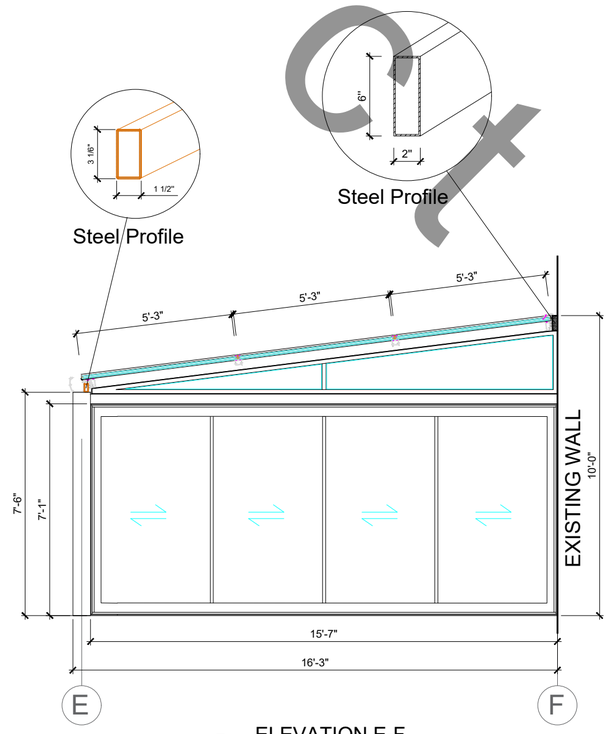

ELEVATION E-F
SCALE: 1/4" = 1'-0"

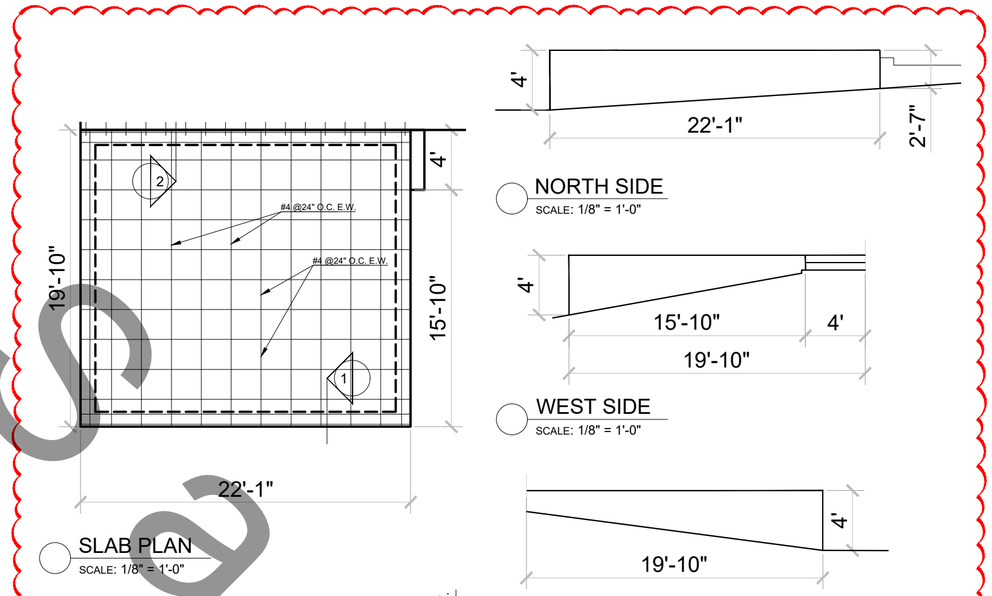

SLAB PLAN
SCALE: 1/8" = 1'-0"

NORTH SIDE
SCALE: 1/8" = 1'-0"

WEST SIDE
SCALE: 1/8" = 1'-0"

EAST SIDE
SCALE: 1/8" = 1'-0"

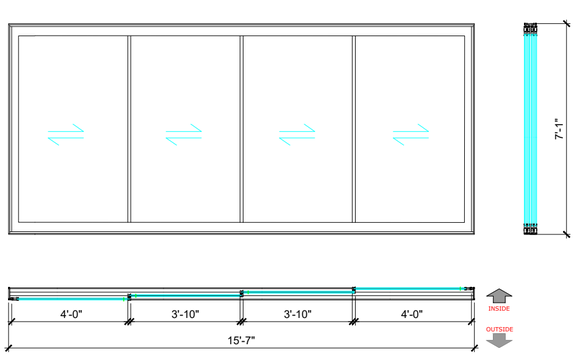

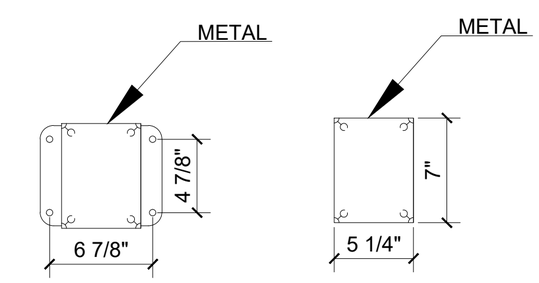

01 BASE PLATE
SCALE: 1-1/2" = 1'-0"

02 PILLAR
SCALE: 1-1/2" = 1'-0"

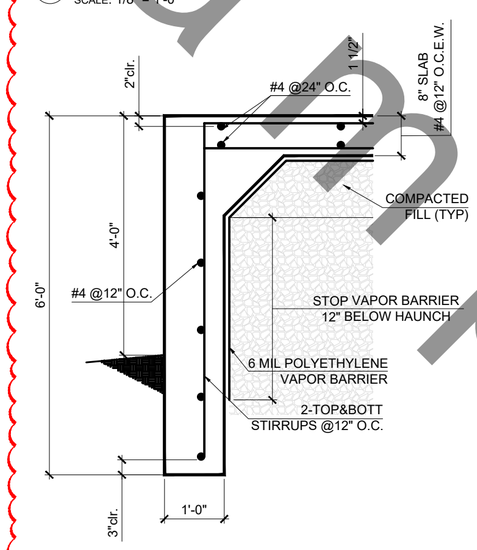

1 SECTION 1
SCALE: 1/2" = 1'-0"

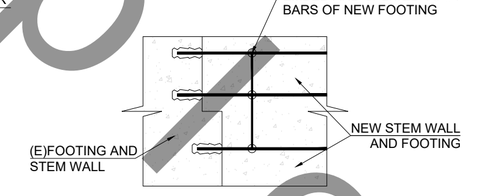

2 SECTION 2
SCALE: 1/2" = 1'-0"

111 NE 1 St

111 NE 1 St

DISCLAIMER:
Due to limited site and project information, ATVAGA accepts no liability for the content of this feasibility study or for the consequences of any actions taken on the basis of the information provided in this feasibility study.

TEAM	GH
CHECKED	AS

DRAWING REVISION

DESCRIPTION	NO.	DATE
REVIEW SET		2021-12-24
PERMIT CORRECTION		2022-02-10

DETAILS

A4

2

Project Sample

Project Sample

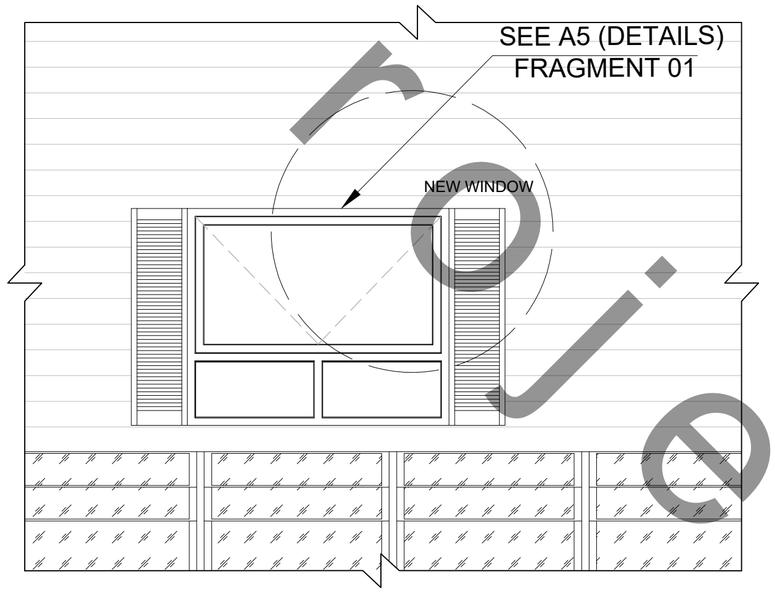

D1 PROPOSED ELEVATION
SCALE: 3/8" = 1'-0"

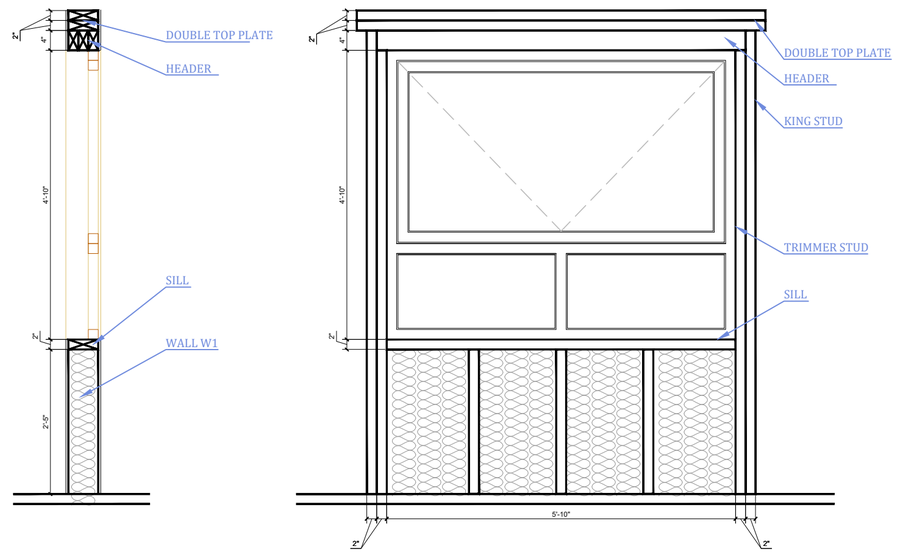

D2 WINDOW OPENING DETAIL
SCALE: 1/2" = 1'-0"

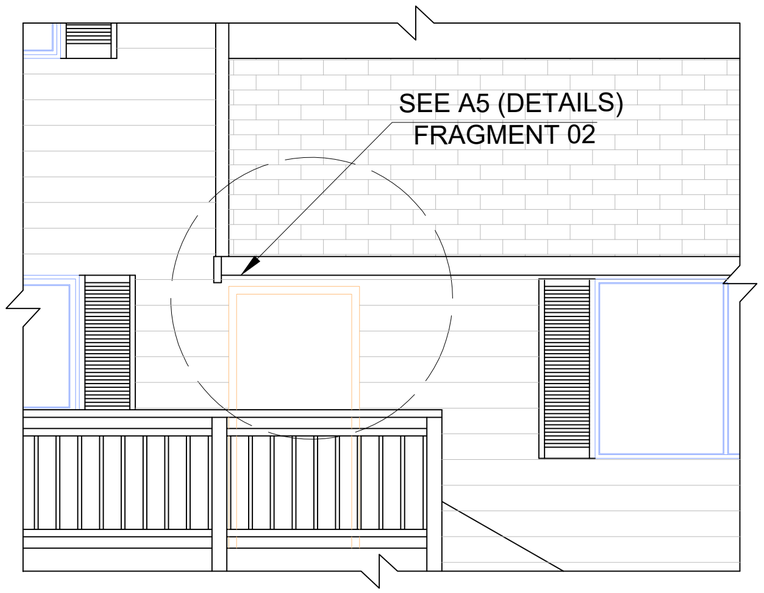

D3 DOOR CLOSING DETAIL
SCALE: 3/8" = 1'-0"

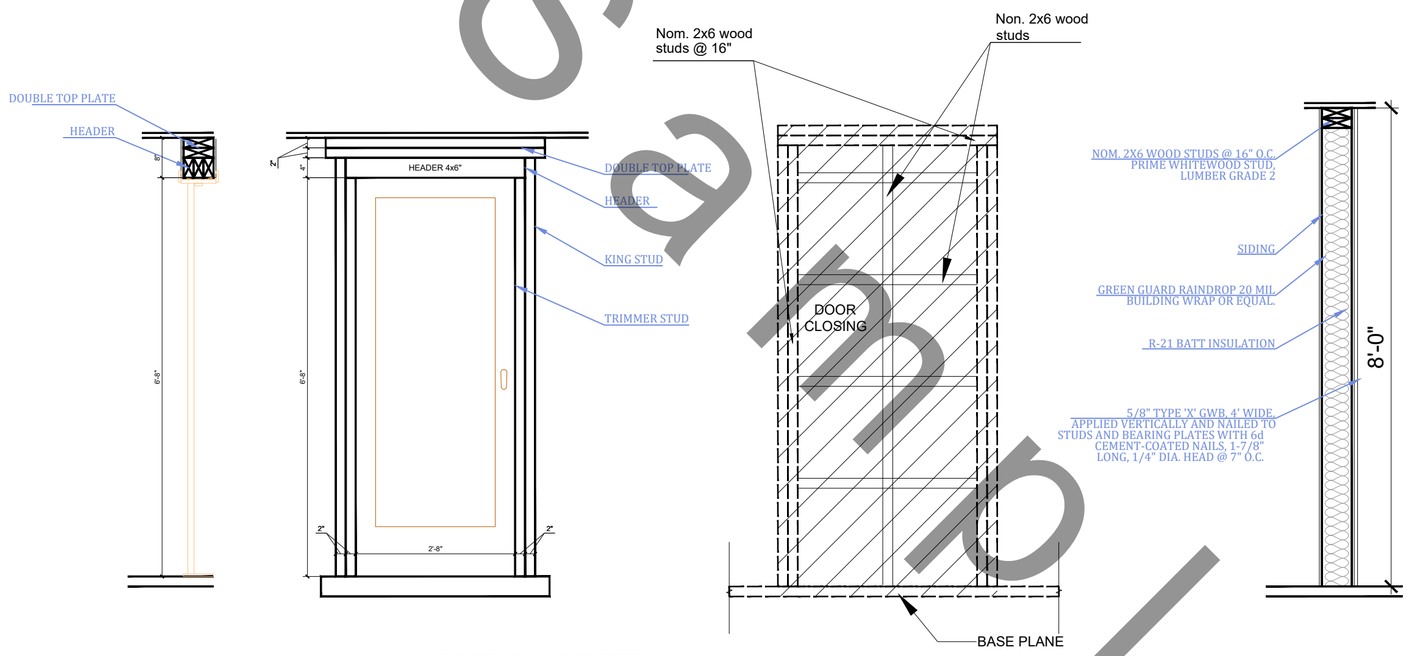

D4 DOOR CLOSING DETAIL
SCALE: 3/8" = 1'-0"

ATVAGA LLC
170 W Dayton St, Ste 204 Edmonds, WA 98020
atvaga.com

111 NE 1 St

111 NE 1 St

DISCLAIMER:
Due to limited site and project information, ATVAGA accepts no liability for the content of this feasibility study or for the consequences of any actions taken on the basis of the information provided in this feasibility study.

TEAM	GH
CHECKED	AS

DRAWING REVISION

DESCRIPTION	NO.	DATE
REVIEW SET		2021–11–16

DETAILS

A5